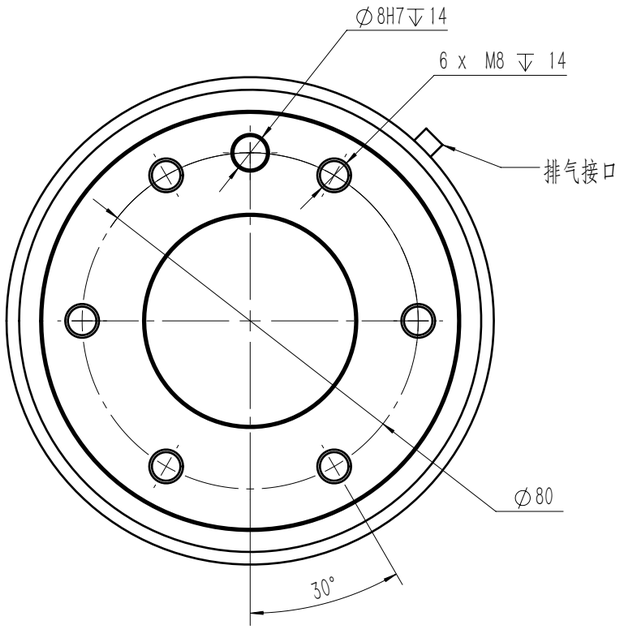
∅8H7↧14
6 x M8 ↧ 14
排气接口
∅80
30°

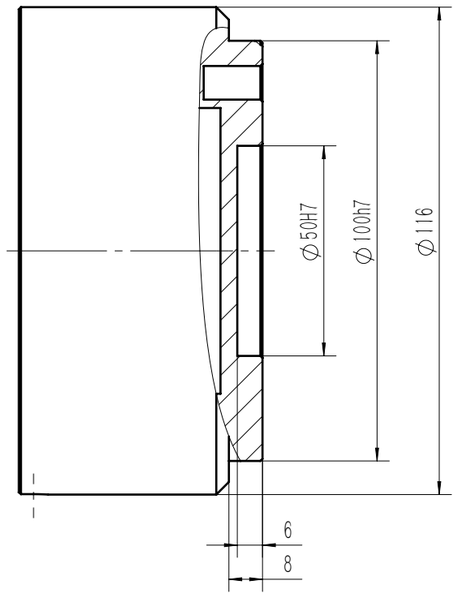
∅50H7
∅100h7
∅116
6
8